NOTES:

1. ALL DIMENSIONS SHOWN IN TABLE ARE IN INCHES, UNLESS OTHERWISE NOTED & ARE ± 1 INCH (25MM).
2. ALL ITEMS SHOWN IN PHANTOM LINE ARE TO BE PROVIDED BY OTHERS.
3. ALL DIMENSIONS ARE SUBJECT TO CHANGE WITHOUT ANY NOTICE.
4. INSTALL UNIONS FITTINGS ON INLET, OUTLET & DRAIN PLUMBING CONNECTIONS.
5. PROVIDE A 2 FEET MINIMUM CLEARANCE ABOVE MINERAL TANK FOR FILLING MEDIA.
6. A GFCI EQUIPT ELECTRICAL OUTLET SHOULD BE PROVIDED WITHIN 5 FEET OF EQUIPMENT LOCATION.
7. USE DIELECTRIC UNIONS ON PLUMBING CONNECTIONS OF CONTROL VALVE WHEN DISSIMILAR METALS ARE PRESENT.
8. PROVIDED SYSTEM SHALL NOT BE SUBJECT TO ANY VACUUM. IF RISK OF VACUUM IS PRESENT, INSTALL SIPHON BREAK ON DRAIN LINE & INSTALL VACUUM RELIEF VALVE WATTS ORDERING CODE # 0556031 ON INLET LINE.
9. BRINE TANK DIMENSIONS SHOWN ON TABLE ARE FACTORY SELECTED FOR USE WITH THE SPECIFIED SYSTEM SIZE.
10. DO NOT INSTALL DRAIN LINE DIRECTLY TO A DRAIN. FOR PROPER DRAIN CONNECTION FOLLOW ALL NATIONAL, STATE AND LOCAL CODES. DO NOT CONSTRUCT DRAIN LINE TO ELEVATIONS THAT EXCEED 4 FEET ABOVE THE CONTROL VALVE'S DRAIN PORT.
11. THE FULL WEIGHT OF THE PIPING AND VALVES MUST BE SUPPORTED BY PIPE HANGERS OR OTHER MEANS.
12. INLET AND OUTLET HEADERS NEED TO BE SIZED ACCORDING TO FLOW RATE REQUIREMENTS BY OTHERS.
13. POWER REQUIREMENTS: 115V/60HZ 2.7 AMPS PER CONTROL VALVE UNLESS OTHERWISE SPECIFIED.
14. BRINE TANK MUST BE LOCATED WITHIN 10 FEET OF SYSTEM CONTROL VALVE AND ON A COMMON FLOOR ELEVATION WITH MINERAL TANK TO ENSURE PROPER BRINE DRAW OPERATION.
15. USE A MINIMUM OF 1 INCH SCH. 40 PVC PIPING FOR CONSTRUCTION OF BRINE LINE
16. LIMIT INLET PRESSURE TO NOT EXCEED MAXIMUM PUBLISHED OPERATING PRESSURE.

SERIES CWS-300H TRIPLEX PROGRESSIVE SYSTEMS DIMENSION (INCHES) & SPECIFICATIONS

| MODEL NO. | ORDERING CODES (EDP NO.) | MINERAL TANK SIZE | INLET | OUTLET | OVERALL HEIGHT (SEE NOTE 5) | OVERALL DEPTH | OVERALL WIDTH | MINIMUN INLET PIPE DISTANCE | BRINE TANK (SEE NOTE 9) | CONTROL VALVE INLET/OUTLET PIPE SIZE (NPT) | DRAIN CONN SIZE (NPT) | SERVICE FLOW GPM @ 15 PSI DROP | PEAK SERVICE FLOW GPM @ 25 PSI DROP | DRAIN FLOW RATE (GPM) | MIN/MAX OPERATING TEMP F° | MIN/MAX OPERATING PRESSURE (PSI) | ESTIMATED OPERATING WEIGHT (LBS) | ESTIMATED SHIPPING WEIGHT (LBS) |
|---|---|---|---|---|---|---|---|---|---|---|---|---|---|---|---|---|---|---|
| M4610WTR-NH | 68110811 | 24 X 72 | 80.75 | 80.75 | 84.5 | 24 | 140 | 7.0 | 30 X 50 | 3.0 | 1.0 | 360 | 510 | 15.0 | 34/110 | 25/125 | 10069 | 3210 |
| M4612WTR-NH | 68110812 | 30 X 72 | 80.75 | 80.75 | 84.5 | 30 | 143 | 9.5 | 39 X 48 | 3.0 | 1.5 | 474 | 424 | 25.0 | 34/110 | 25/125 | 15471 | 4800 |
| M4614WTR-NH | 68110813 | 36 X 72 | 80.75 | 80.75 | 84.5 | 36 | 172 | 12.0 | 39 X 48 | 3.0 | 1.5 | 555 | 750 | 35.0 | 34/110 | 25/125 | 19982 | 6045 |
| M4616WTR-NH | 68110814 | 42 X 72 | 80.75 | 80.75 | 84.5 | 42 | 178 | 14.5 | 42 X 60 | 3.0 | 2.0 | 600 | 804 | 45.0 | 34/110 | 25/125 | 26582 | 9735 |
| M4618WTR-NH | 68110815 | 48 X 72 | 80.75 | 80.75 | 84.5 | 48 | 184 | 17.0 | 50 X 60 | 3.0 | 2.0 | 639 | 840 | 60.0 | 34/110 | 25/125 | 36591 | 12885 |

WATTS® 815 CHESTNUT ST. NORTH ANDOVER, MA 01845

THIS DRAWING DISCLOSES CONFIDENTIAL AND OTHER DATA OF A PROPRIETARY NATURE OWNED BY WATTS WATER TECHNOLOGIES, INC AND MAY NOT BE USED OR DISCLOSED TO OTHERS WITHOUT THE PRIOR WRITTEN CONSENT OF WATTS WATER TECHNOLOGIES, INC.

| DWG BY: | DATE: | SCALE: | SUPERSEDES: |
|---|---|---|---|
| JR | 4/3/2023 | NTS | SEE TABLE |
| CHD BY: JR | DATE: 4/3/2023 | SHEET: 1 OF 1 | |

LIMITS UNLESS SPECIFIED
FRACTIONAL ±1/32 ANGULAR ±1°
DECIMAL in[mm] .XX[0.XX] ± .125[3.175] .XXX[0.XX] ± .25[6.35]
COMMON AXIS in[mm] 21[533.38] TIR
SURFACE FINISH µin[µmeter] 125[3.2] RMS
DO NOT SCALE DRAWING

TITLE: GENERAL INSTALLATION, SERIES CWS-300H TRIPLEX PROGRESSIVE SYSTEMS 3" WATER SOFTENERS

MATERIAL: N/A

OTHER: ESTIMATED WEIGHT: SEE TABLE

PART NO.: SEE TABLE

EDP NO.: SEE TABLE

FILE TYPE: CAD

SIZE: D

REV: 2

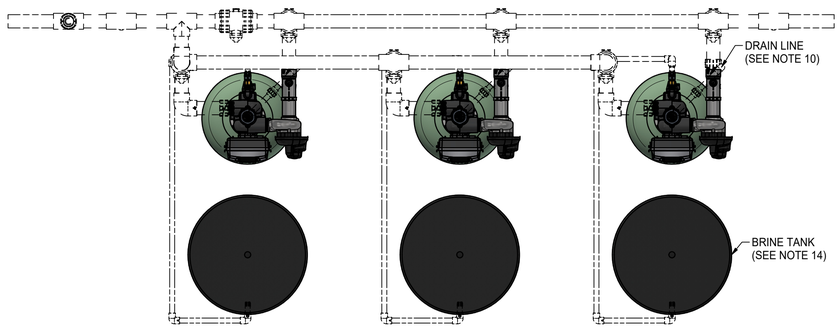


TOP VIEW

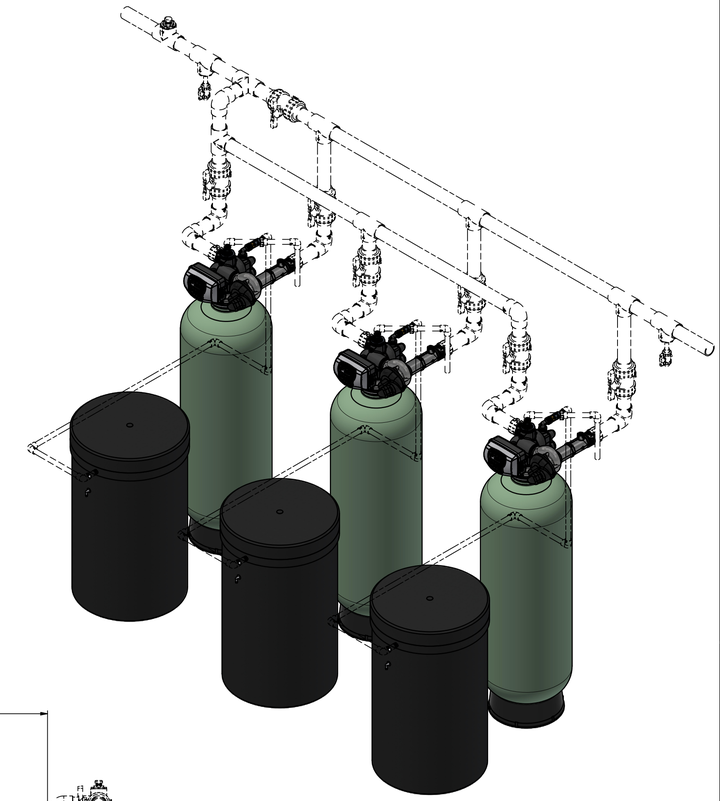

ISOMETRIC VIEW

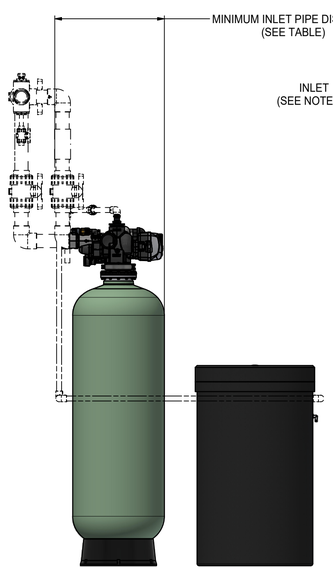


SIDE VIEW

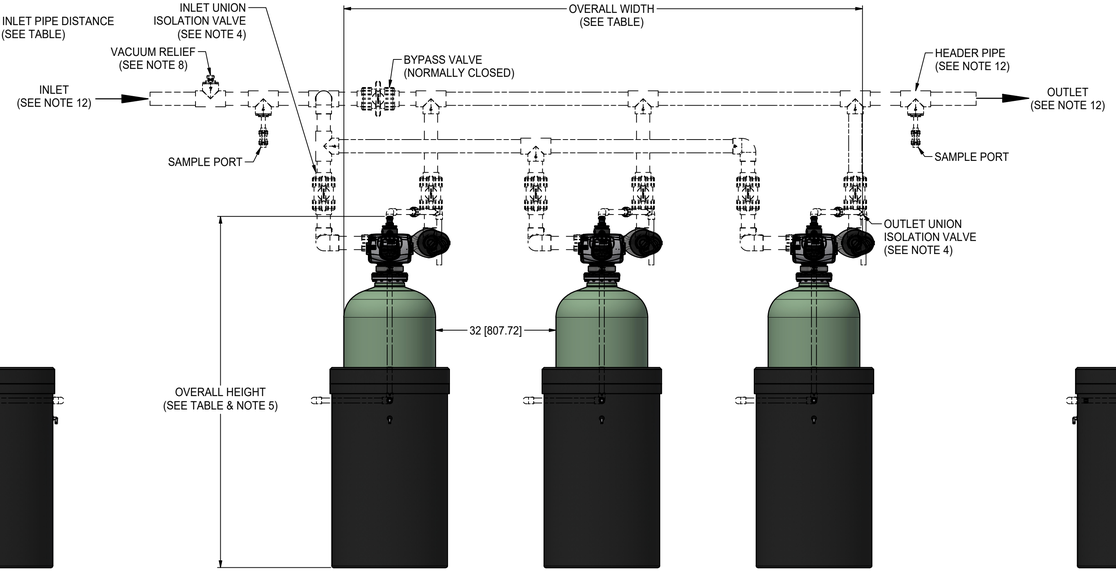


FRONT VIEW

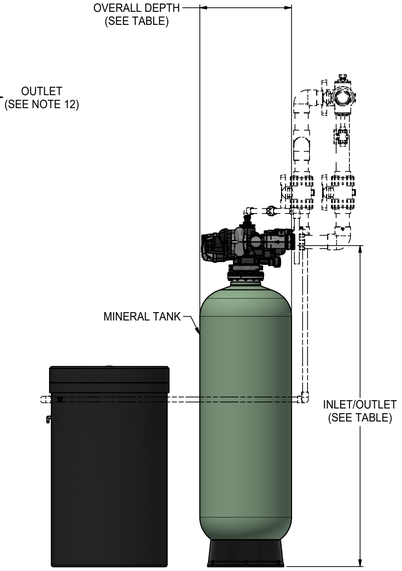


SIDE VIEW

| CLIENT PROJECT SIGN-OFF |
|---|
| JOB NAME: |
| JOB LOCATION: |
| CONTRACTOR: |
| CONTRACTOR APPROVAL: |
| CONTRACTOR APPROVAL DATE: |
| CONTRACTOR PO NO: |
| ENGINEER: |
| ENGINEER APPROVAL: |
| ENGINEER APPROVAL DATE: |